PRINTPAPA

PRINT TEMPLATE
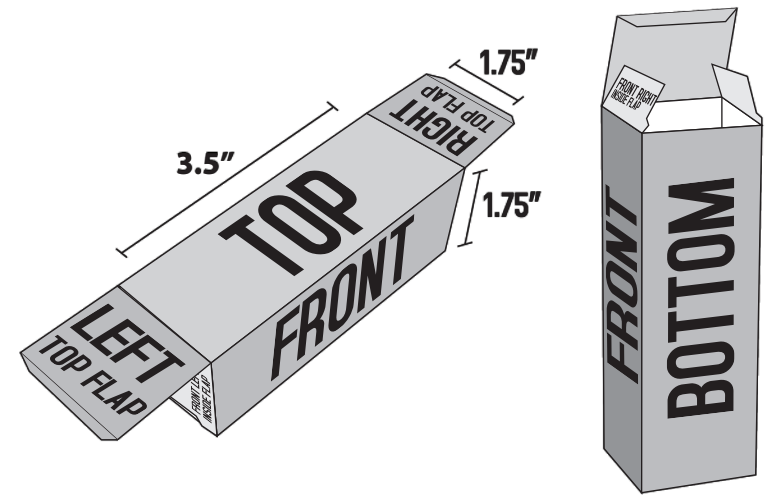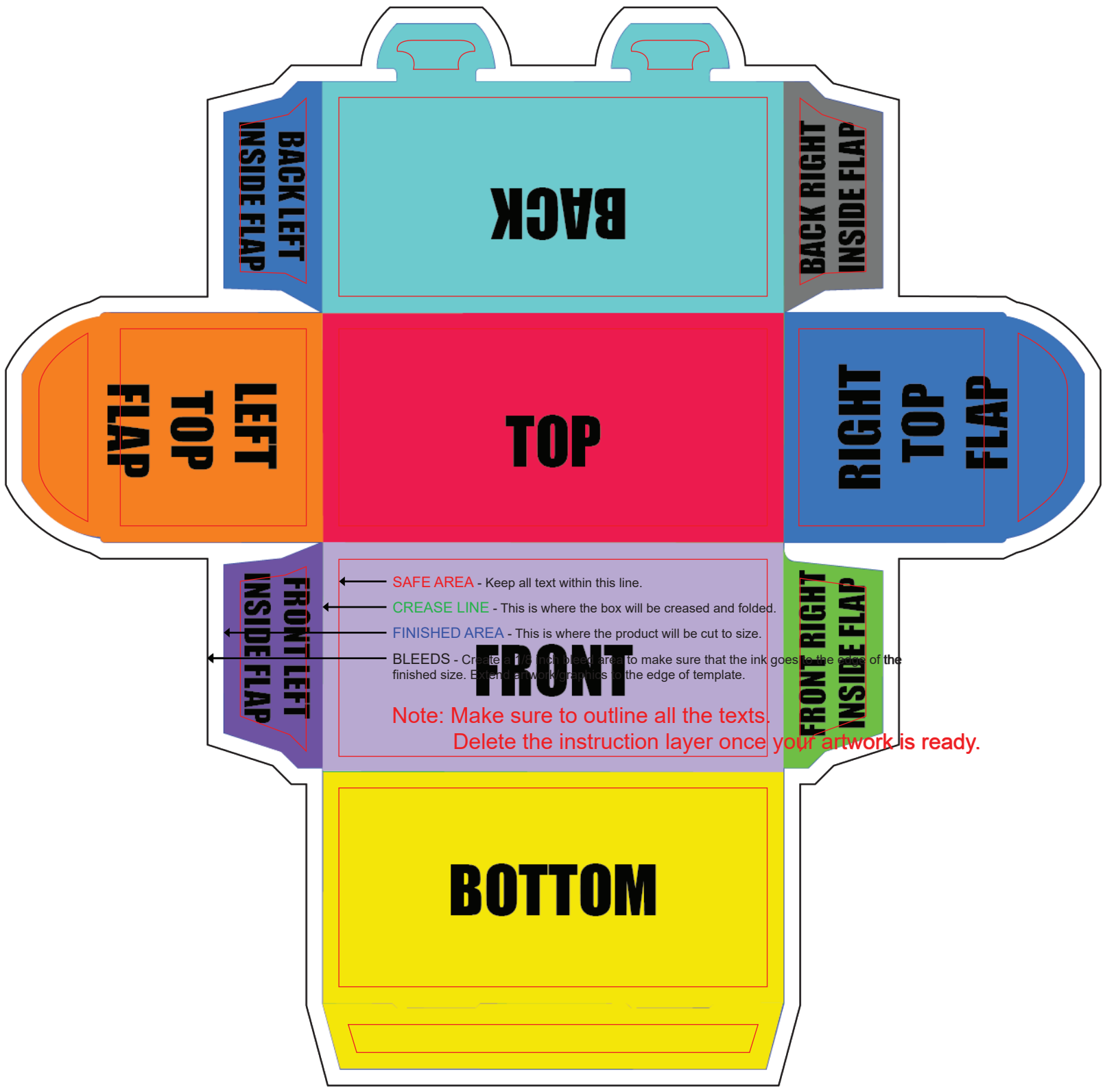
Product: 2 Golf Ball Box
Size: 3.5” x 1.75” x 1.75”